Specifications

WAFER

备注(Remark)
1.材料(Material)
胶芯:LCP/PA6T UL94V-0
Housing:LCP/PA6T UL94V-0
端子:磷青铜/黄铜
Contact:Phosphor bronze/Brass

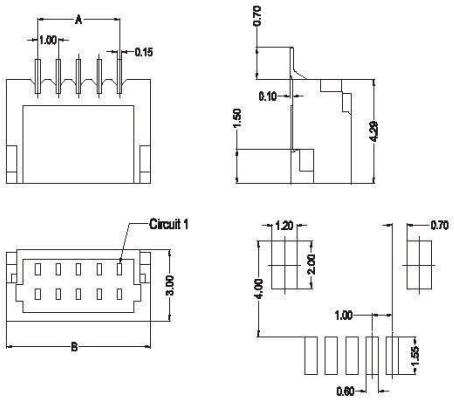

Recommand PCB Layout

KWC1000-SR-XX

Poles	Dimensions(mm)	
	A	B
02	1.00	4.05
03	2.00	5.05
04	3.00	6.05
05	4.00	7.05
06	5.00	8.05
07	6.00	9.05
08	7.00	10.05
09	8.00	11.05
10	9.00	12.05
11	10.00	13.05
12	11.00	14.05
13	12.00	15.05
14	13.00	16.05
15	14.00	17.05
16	15.00	18.05
17	16.00	19.05
18	17.00	20.05
19	18.00	21.05
20	19.00	22.05
24	23.00	26.05

Housing

备注(Remark)
1.材料(Material)
胶芯:PA66/PBT UL94V-0,
Housing:PA66/PBT UL94V-0

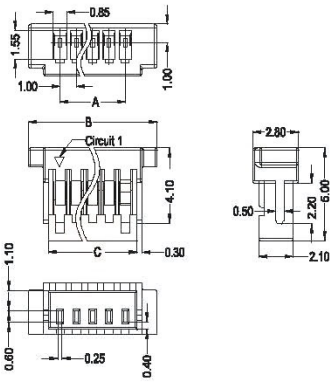

Poles	Dimensions(mm)			Poles	Dimensions(mm)		
	A	B	C		A	B	C
02	1.00	5.00	2.40	13	12.00	16.00	13.40
03	2.00	6.00	3.40	14	13.00	17.00	14.40
04	3.00	7.00	4.40	15	14.00	18.00	15.40
05	4.00	8.00	5.40	16	15.00	19.00	16.40
06	5.00	9.00	6.40	17	16.00	20.00	17.40
07	6.00	10.00	7.40	18	17.00	21.00	18.40
08	7.00	11.00	8.40	19	18.00	22.00	19.40
09	8.00	12.00	9.40	20	19.00	23.00	20.40
10	9.00	13.00	10.40	22	21.00	25.00	21.40
11	10.00	14.00	11.40	24	23.00	27.00	23.40
12	11.00	15.00	12.40				

KWH1000-SR-XX

W

WAFER

Housing

备注(Remark)
1.材料(Material)
胶芯:PA66/PBT UL94V-0,
Housing:PA66/PBT UL94V-0

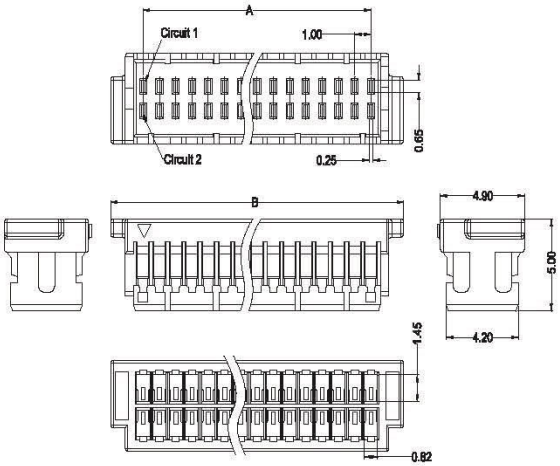

KWH1000-SR1-XX

Poles	Dimensions (mm)	
	A	B
10	4.00	8.00
12	5.00	9.00
16	7.00	11.00
20	9.00	13.00
30	14.00	18.00
40	19.00	23.00
50	24.00	28.00